PART NO. DCAW092

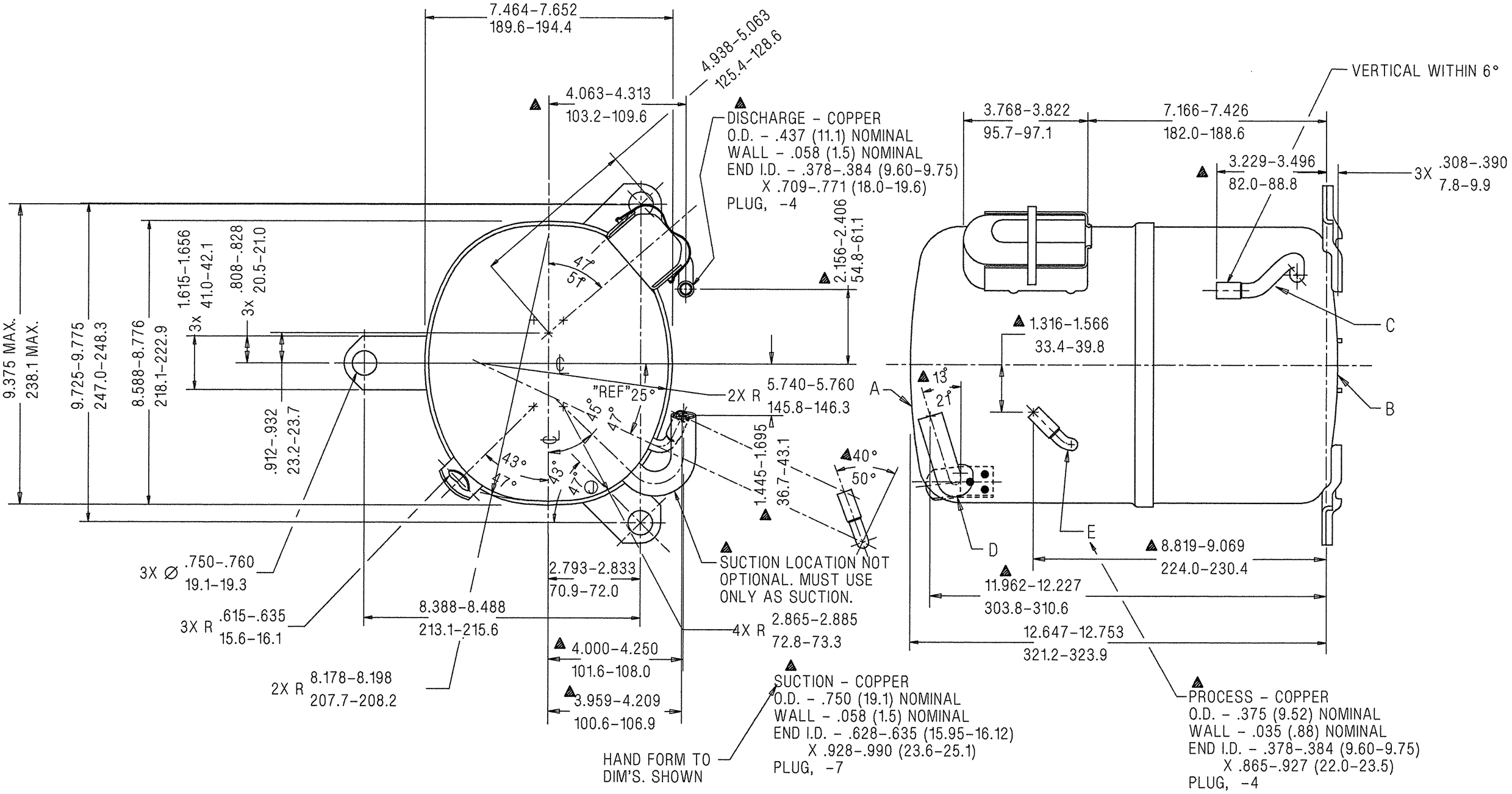

NOTE

1. IF SPECIFIED ON BILL OF MATERIAL ASSEMBLE THESE PARTS AS SHOWN.

DIMENSIONING = INCHES / MILLIMETERS OR INCHES (MILLIMETERS)

AWG

Q.A. SYMBOLS
✱ = CATEGORY I
▲ = CATEGORY II
■ = CATEGORY III
= CATEGORY IV

MANUFACTURING NOTES

1. SEE DWG. #AHT38 FOR ASSY. OF DISCHARGE CONNECTOR & LOWER SHOCK LOOP IN LOWER HOUSING.
2. SEE SPEC. "A-B" & "A-C" FOR PROCESSING.

LT	LC	CHANGE	DATE
A	HA642-26		
B	HA674-7		
C	34711		
D	34649		
E	34467		
REL		#233955-151	—

THIS DRAWING OR PRINT IS THE PROPERTY OF TECUMSEH PRODUCTS COMPANY (TECUMSEH) AND CONTAINS INFORMATION BELONGING TO TECUMSEH. RECIPIENT AGREES TO THE SPECIFIC CONDITION THAT NEITHER IT NOR ANYONE ACTING WITH IT WILL USE THEREON OR DISCLOSED THEREIN SMALL DESIGN, MODEL OR MAKE AVAILABLE TO SPECIFIC PERSONS WITHOUT THE SPECIFIC AND WRITTEN CONSENT OF TECUMSEH. RECIPIENT ALSO AGREES THAT INFORMATION ONLY AS EXPRESSLY AND SPECIFICALLY APPROVED IN WRITING BY TECUMSEH. NOT TO BE USED FOR ANY OTHER PURPOSE. NOT TO BE COPIED OR DUPLICATED IN ANY FORM OR MANNER WHATSOEVER WITHOUT TECUMSEH'S PRIOR EXPRESS AND SPECIFIC WRITTEN CONSENT AND THEREUPON ONLY ON THE AGREEMENT THEREOF TO TECUMSEH AT THE TIME THE RECIPIENT IS NOTIFIED OF SUCH RELEASE IS MADE.

DIS. CODE 34D

NAME SALES COMPRESSOR

DO NOT SCALE THIS DRAWING ALL FERROUS MATERIALS MUST BE MAGNETIZED AS RECEIVED OR AT COMPRESSOR ASSEMBLY.

DWN. BRODERICK 1-9-87 | CK. NMCDUGLE 4-2-97 | APR. BLANDEN | SCALE 1" = 2"

THIS PRINT SUPERSEDES ALL PRINTS PRIOR TO

TECUMSEH PRODUCTS CO.
TECUMSEH, MICHIGAN

MATERIAL NOTED

INTERNAL USE ONLY
UGIIDISK5:[SHERMAN]AW-DCAW092□REL-C.PRT

PART NO. DCAW092